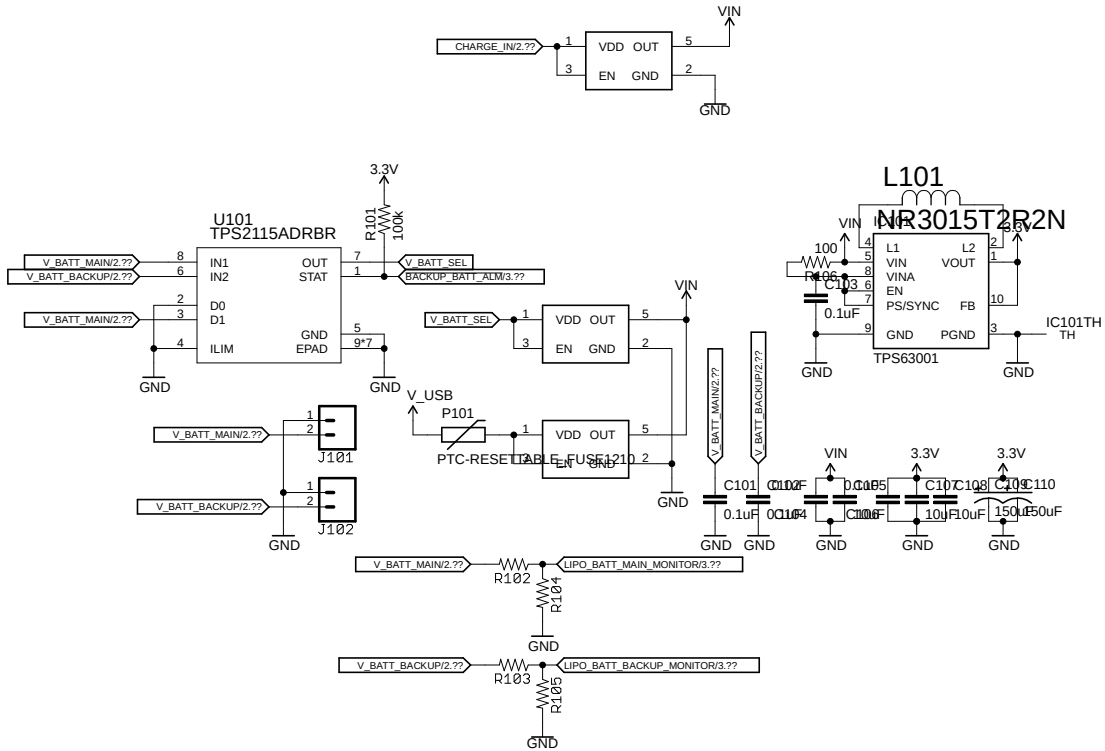
CHARGE_IN/2.??
VDD OUT
EN GND
VIN
GND
U101
TPS2115ADRBR
IN1
IN2
D0
D1
ILIM
OUT
STAT
GND
EPAD
V_BATT_MAIN/2.??
V_BATT_BACKUP/2.??
V_BATT_SEL
BACKUP_BATT_ALM/3.??
3.3V
R101
100k
V_USB
P101
PTC-RESETTABLE_FUSE1210
J101
J102
L101
NR3015T2R2N
L1
VIN
VINA
EN
PS/SYNC
GND
L2
VOUT
FB
PGND
TPS63001
IC101TH
TH
R106
100
C103
0.1uF
C101
C107
C108
C109
C110
10uF
150uF
LIPO_BATT_MAIN_MONITOR/3.??
LIPO_BATT_BACKUP_MONITOR/3.??
R102
R103
R104
R105

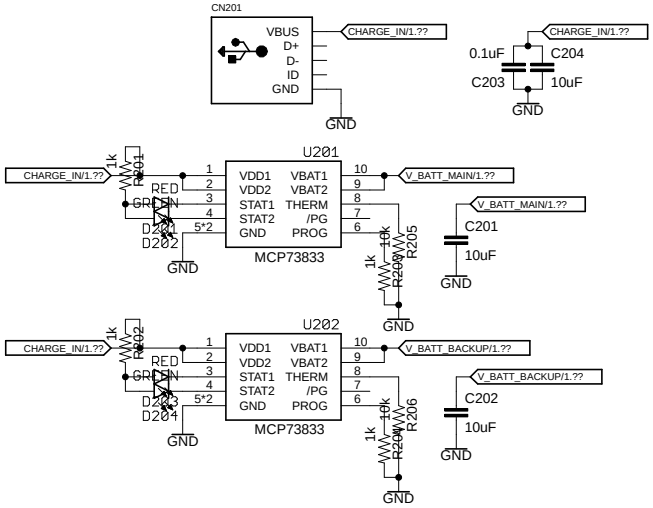
CN201
VBUS
D+
D-
ID
GND
CHARGE_IN/1.??
GND
CHARGE_IN/1.??
0.1uF
C204
C203
10uF
GND
U201
CHARGE_IN/1.??
1k
R201
RED
GREEN
D201
D202
5*2
GND
VDD1
VDD2
STAT1
STAT2
GND
VBAT1
VBAT2
THERM
/PG
PROG
MCP73833
V_BATT_MAIN/1.??
V_BATT_MAIN/1.??
C201
10uF
GND
1k
R208
10k
R205
GND
U202
CHARGE_IN/1.??
1k
R202
RED
GREEN
D203
D204
5*2
GND
VDD1
VDD2
STAT1
STAT2
GND
VBAT1
VBAT2
THERM
/PG
PROG
MCP73833
V_BATT_BACKUP/1.??
V_BATT_BACKUP/1.??
C202
10uF
GND
1k
R209
10k
R206
GND

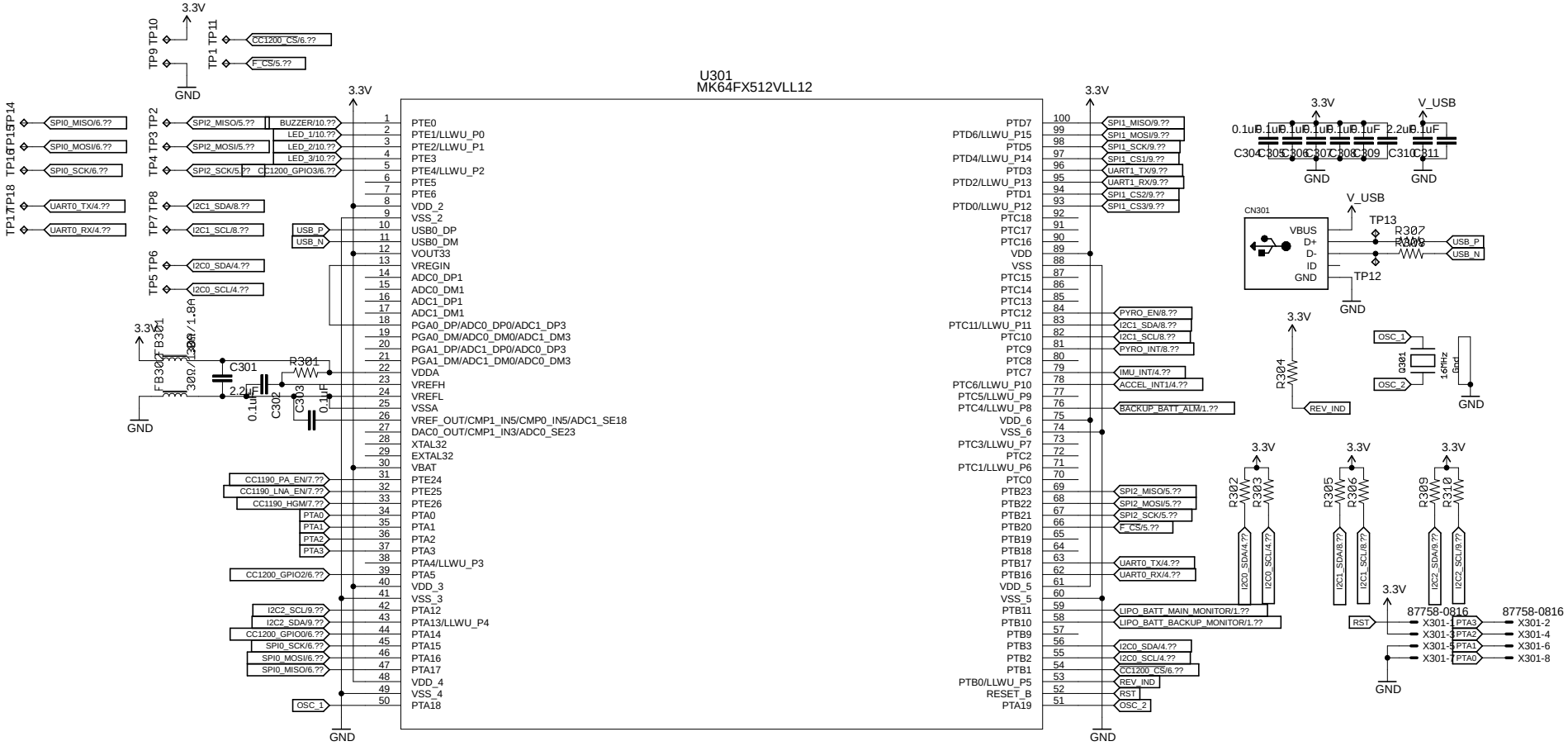
U301
MK64FX512VLL12
3.3V
GND
TP9 TP10
TP1 TP11
CC1200_CS/6.??
F_CS/5.??
TP14
TP15
TP16
TP17
TP18
SPI0_MISO/6.??
SPI0_MOSI/6.??
SPI0_SCK/6.??
UART0_TX/4.??
UART0_RX/4.??
TP4 TP3 TP2
SPI2_MISO/5.??
SPI2_MOSI/5.??
SPI2_SCK/5.??
BUZZER/10.??
LED_1/10.??
LED_2/10.??
LED_3/10.??
CC1200_GPIO3/6.??
TP7 TP8
I2C1_SDA/8.??
I2C1_SCL/8.??
TP5 TP6
I2C0_SDA/4.??
I2C0_SCL/4.??
USB_P
USB_N
FB301
B301
C301
R301
C302
C303
2.2uF
0.1uF
PTE0
PTE1/LLWU_P0
PTE2/LLWU_P1
PTE3
PTE4/LLWU_P2
PTE5
PTE6
VDD_2
VSS_2
USB0_DP
USB0_DM
VOUT33
VREGIN
ADC0_DP1
ADC0_DM1
ADC1_DP1
ADC1_DM1
PGA0_DP/ADC0_DP0/ADC1_DP3
PGA0_DM/ADC0_DM0/ADC1_DM3
PGA1_DP/ADC1_DP0/ADC0_DP3
PGA1_DM/ADC1_DM0/ADC0_DM3
VDDA
VREFH
VREFL
VSSA
VREF_OUT/CMP1_IN5/CMP0_IN5/ADC1_SE18
DAC0_OUT/CMP1_IN3/ADC0_SE23
XTAL32
EXTAL32
VBAT
PTE24
PTE25
PTE26
PTA0
PTA1
PTA2
PTA3
PTA4/LLWU_P3
PTA5
VDD_3
VSS_3
PTA12
PTA13/LLWU_P4
PTA14
PTA15
PTA16
PTA17
VDD_4
VSS_4
PTA18
CC1190_PA_EN/7.??
CC1190_LNA_EN/7.??
CC1190_HGM/7.??
CC1200_GPIO2/6.??
I2C2_SCL/9.??
I2C2_SDA/9.??
OSC_1
PTD7
PTD6/LLWU_P15
PTD5
PTD4/LLWU_P14
PTD3
PTD2/LLWU_P13
PTD1
PTD0/LLWU_P12
PTC18
PTC17
PTC16
VDD
VSS
PTC15
PTC14
PTC13
PTC12
PTC11/LLWU_P11
PTC10
PTC9
PTC8
PTC7
PTC6/LLWU_P10
PTC5/LLWU_P9
PTC4/LLWU_P8
VDD_6
VSS_6
PTC3/LLWU_P7
PTC2
PTC1/LLWU_P6
PTC0
PTB23
PTB22
PTB21
PTB20
PTB19
PTB18
PTB17
PTB16
VDD_5
VSS_5
PTB11
PTB10
PTB9
PTB3
PTB2
PTB1
PTB0/LLWU_P5
RESET_B
PTA19
SPI1_MISO/9.??
SPI1_MOSI/9.??
SPI1_SCK/9.??
SPI1_CS1/9.??
UART1_TX/9.??
UART1_RX/9.??
SPI1_CS2/9.??
SPI1_CS3/9.??
PYRO_EN/8.??
PYRO_INT/8.??
IMU_INT/4.??
ACCEL_INT1/4.??
BACKUP_BATT_ALM/1.??
LIPO_BATT_MAIN_MONITOR/1.??
LIPO_BATT_BACKUP_MONITOR/1.??
REV_IND
RST
V_USB
0.1uF
2.2uF
C304
C305
C306
C307
C308
C309
C310
C311
CN301
VBUS
D+
D-
ID
GND
TP13
TP12
R307
R308
R304
OSC_1
OSC_2
Q301
16MHz
R302
R303
R305
R306
R309
R310
I2C0_SDA/4.??
I2C0_SCL/4.??
I2C1_SDA/8.??
I2C1_SCL/8.??
I2C2_SDA/9.??
I2C2_SCL/9.??
87758-0816
X301-1
X301-3
X301-5
X301-7
X301-2
X301-4
X301-6
X301-8
PTA3
PTA2
PTA1
PTA0

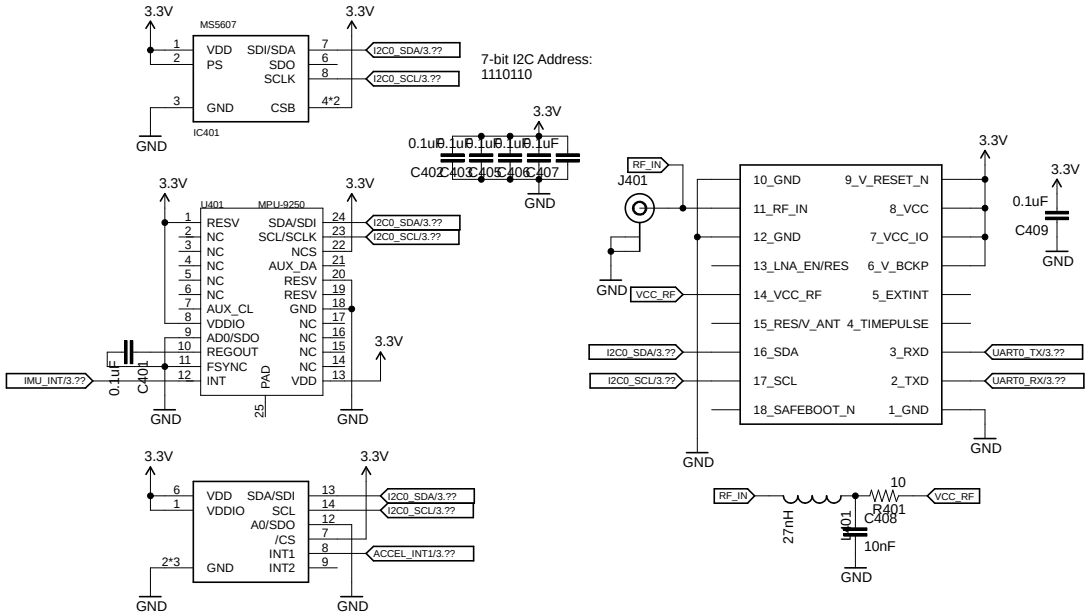
3.3V
MS5607
VDD
PS
GND
SDI/SDA
SDO
SCLK
CSB
4*2
IC401
I2C0_SDA/3.??
I2C0_SCL/3.??
7-bit I2C Address:
1110110
0.1uF
C402
C403
C404
C405
C406
C407
U401
MPU-9250
RESV
NC
AUX_CL
VDDIO
AD0/SDO
REGOUT
FSYNC
INT
SDA/SDI
SCL/SCLK
NCS
AUX_DA
GND
VDD
PAD
IMU_INT/3.??
C401
VDD
VDDIO
SCL
A0/SDO
/CS
INT1
INT2
ACCEL_INT1/3.??
RF_IN
J401
VCC_RF
10_GND
11_RF_IN
12_GND
13_LNA_EN/RES
14_VCC_RF
15_RES/V_ANT
16_SDA
17_SCL
18_SAFEBOOT_N
9_V_RESET_N
8_VCC
7_VCC_IO
6_V_BCKP
5_EXTINT
4_TIMEPULSE
3_RXD
2_TXD
1_GND
UART0_TX/3.??
UART0_RX/3.??
C409
27nH
L401
R401
10
C408
10nF

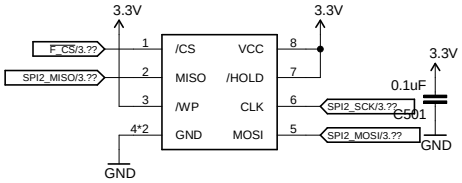
3.3V
3.3V
3.3V
F_CS/3.??
SPI2_MISO/3.??
1
2
3
4*2
/CS
MISO
/WP
GND
VCC
/HOLD
CLK
MOSI
8
7
6
5
SPI2_SCK/3.??
SPI2_MOSI/3.??
0.1uF
C501
GND
GND

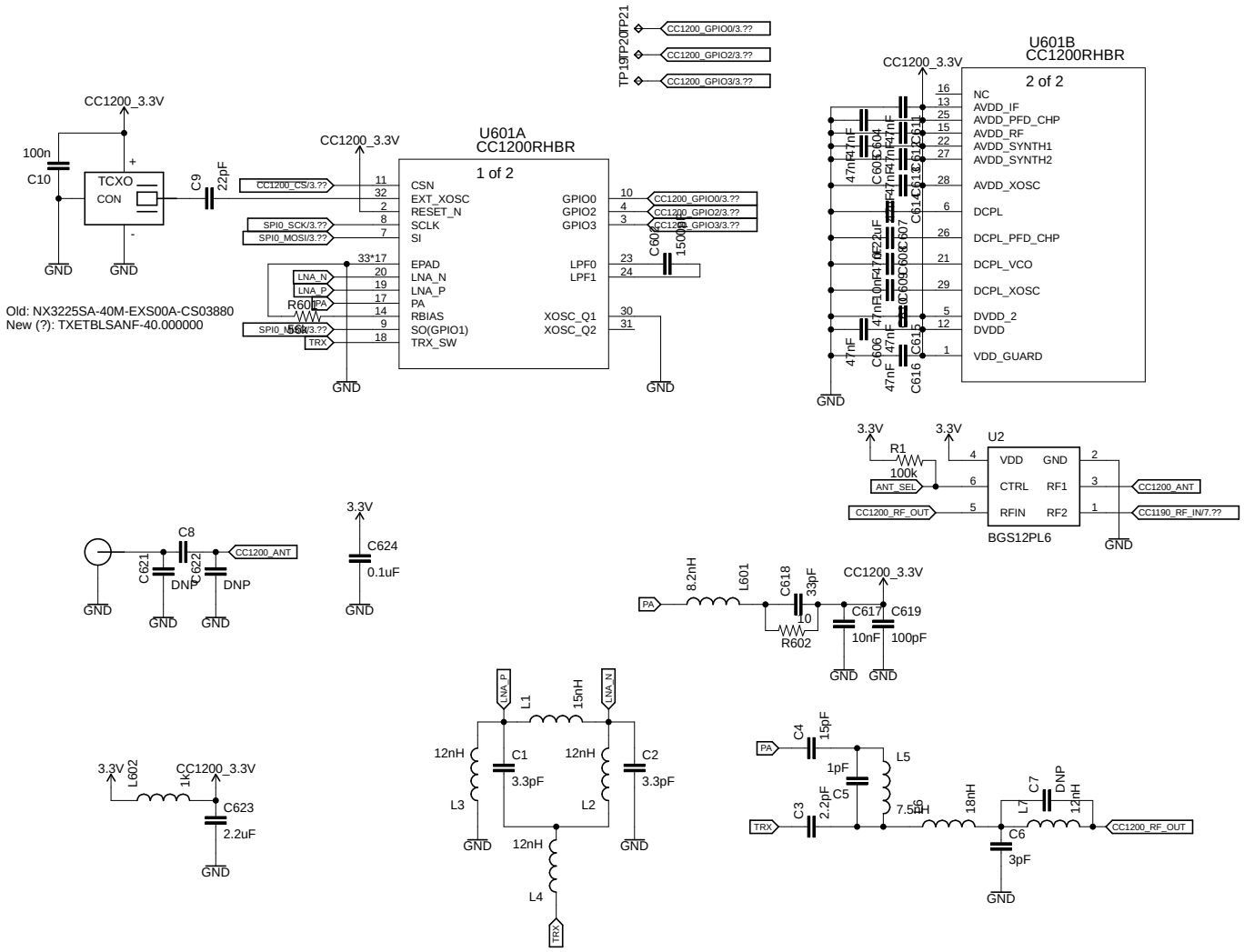
U601A
CC1200RHBR
1 of 2
CSN
EXT_XOSC
RESET_N
SCLK
SI
EPAD
LNA_N
LNA_P
PA
RBIAS
SO(GPIO1)
TRX_SW
GPIO0
GPIO2
GPIO3
LPF0
LPF1
XOSC_Q1
XOSC_Q2
U601B
CC1200RHBR
2 of 2
NC
AVDD_IF
AVDD_PFD_CHP
AVDD_RF
AVDD_SYNTH1
AVDD_SYNTH2
AVDD_XOSC
DCPL
DCPL_PFD_CHP
DCPL_VCO
DCPL_XOSC
DVDD_2
DVDD
VDD_GUARD
CC1200_3.3V
CC1200_GPIO0/3.??
CC1200_GPIO2/3.??
CC1200_GPIO3/3.??
CC1200_CS/3.??
SPI0_SCK/3.??
SPI0_MOSI/3.??
SPI0_MISO/3.??
LNA_N
LNA_P
PA
TRX
TP19
TP20
TP21
TCXO
CON
C10
100n
C9
22pF
R601
560
C604
1500pF
Old: NX3225SA-40M-EXS00A-CS03880
New (?): TXETBLSANF-40.000000
GND
U2
BGS12PL6
VDD
GND
CTRL
RF1
RFIN
RF2
R1
100k
3.3V
ANT_SEL
CC1200_RF_OUT
CC1200_ANT
CC1190_RF_IN/7.??
C8
C621
C622
DNP
C624
0.1uF
L601
8.2nH
C618
33pF
R602
C617
10nF
C619
100pF
L1
15nH
C1
3.3pF
C2
L2
L3
L4
12nH
L602
1k
C623
2.2uF
C4
15pF
C5
1pF
L5
7.5nH
C3
2.2pF
18nH
C6
3pF
C7
L7
12nH
C601
C602
C603
C605
C606
C607
C608
C609
C610
C611
C612
C613
C614
C615
C616
47nF
2.2uF
10nF

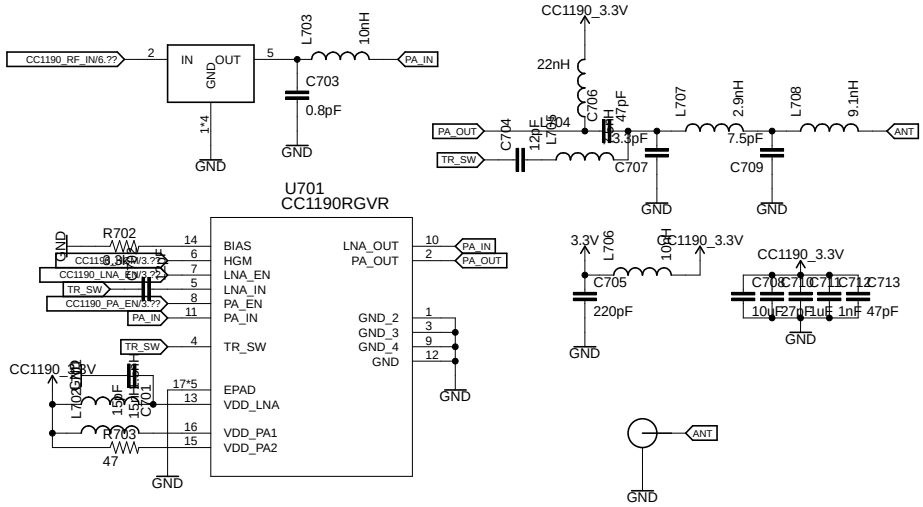
CC1190_RF_IN/6.??
2
IN
OUT
GND
5
1*4
GND
L703
10nH
C703
0.8pF
GND
PA_IN
CC1190_3.3V
22nH
C706
47pF
L707
2.9nH
L708
9.1nH
PA_OUT
C704
12pF
L705
L704
3.3pF
C707
7.5pF
C709
ANT
TR_SW
GND
GND
U701
CC1190RGVR
R702
8.8K
BIAS
HGM
LNA_EN
LNA_IN
PA_EN
PA_IN
TR_SW
EPAD
VDD_LNA
VDD_PA1
VDD_PA2
LNA_OUT
PA_OUT
GND_2
GND_3
GND_4
GND
CC1190_LNA_EN/3.??
CC1190_PA_EN/3.??
CC1190_3.3V
L702
15nH
C701
15pF
R703
47
GND
3.3V
L706
10nH
C705
220pF
CC1190_3.3V
CC1190_3.3V
C708
C710
C711
C712
C713
10uF
27pF
1uF
1nF
47pF
GND
ANT
GND

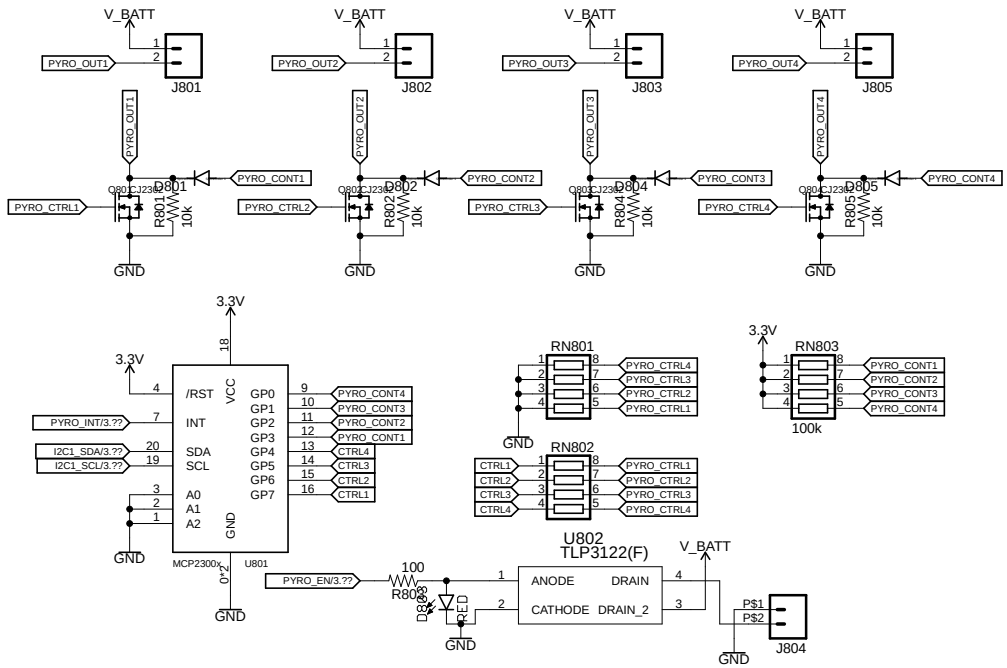
V_BATT
PYRO_OUT1
J801
PYRO_OUT2
J802
PYRO_OUT3
J803
PYRO_OUT4
J805
PYRO_CONT1
PYRO_CONT2
PYRO_CONT3
PYRO_CONT4
PYRO_CTRL1
PYRO_CTRL2
PYRO_CTRL3
PYRO_CTRL4
Q801
Q802
Q803
Q805
R801
R802
R804
R805
10k
GND
3.3V
/RST
INT
SDA
SCL
A0
A1
A2
VCC
GND
GP0
GP1
GP2
GP3
GP4
GP5
GP6
GP7
PYRO_INT/3.??
I2C1_SDA/3.??
I2C1_SCL/3.??
CTRL1
CTRL2
CTRL3
CTRL4
MCP2300x
U801
RN801
RN802
RN803
100k
U802
TLP3122(F)
ANODE
CATHODE
DRAIN
DRAIN_2
PYRO_EN/3.??
100
R806
D806
RED
P$1
P$2
J804

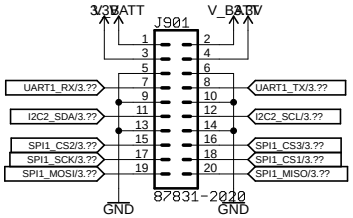
3/3V
BATT
V_BATT
3/3V
J901
1
2
3
4
5
6
7
8
9
10
11
12
13
14
15
16
17
18
19
20
UART1_RX/3.??
UART1_TX/3.??
I2C2_SDA/3.??
I2C2_SCL/3.??
SPI1_CS2/3.??
SPI1_CS3/3.??
SPI1_SCK/3.??
SPI1_CS1/3.??
SPI1_MOSI/3.??
SPI1_MISO/3.??
87831-2020
GND
GND

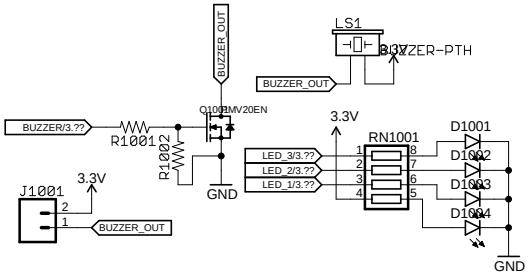
BUZZER_OUT
LS1
BUZZER-PTH
BUZZER_OUT
BUZZER/3.??
R1001
R1002
Q1001
3.3V
RN1001
D1001
D1002
D1003
D1004
LED_3/3.??
LED_2/3.??
LED_1/3.??
GND
J1001
3.3V
BUZZER_OUT
GND